REVISIONS				
SYM	DESCRIPTION	ECO	DATE	APPROVED
A	RAWLBOLT HOLE SIZE REVISED SEE ECN L86/756	—	5/3/86	
B	ADDED NOTES RELATIVE TO ALTERNATE TOWER POSITION		28-7-87	FH
C	26' REF WAS 2[illegible]' 12' REF WAS 12.5' ADD 30' DIMS & 15' TYP		NKN 4/8[illegible]	[illegible]

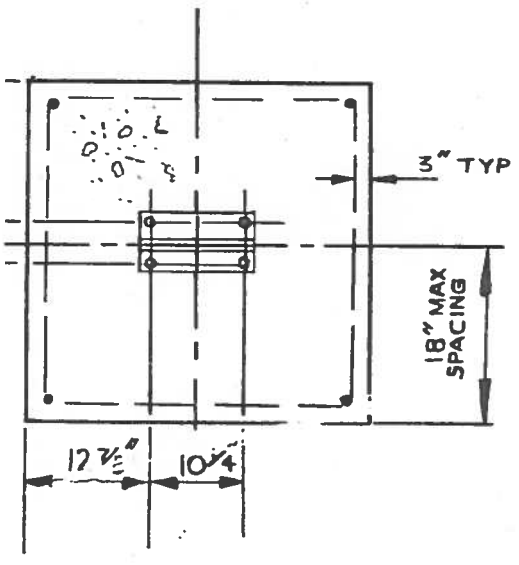

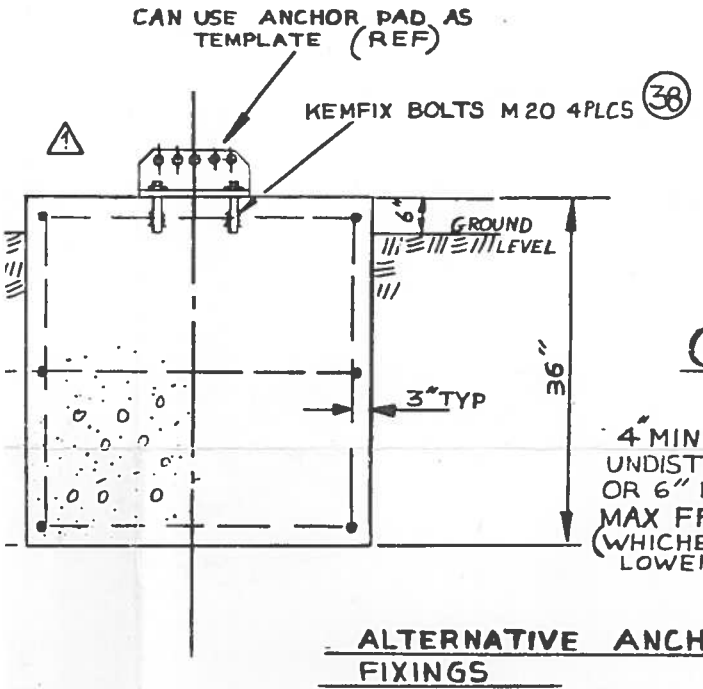

OR

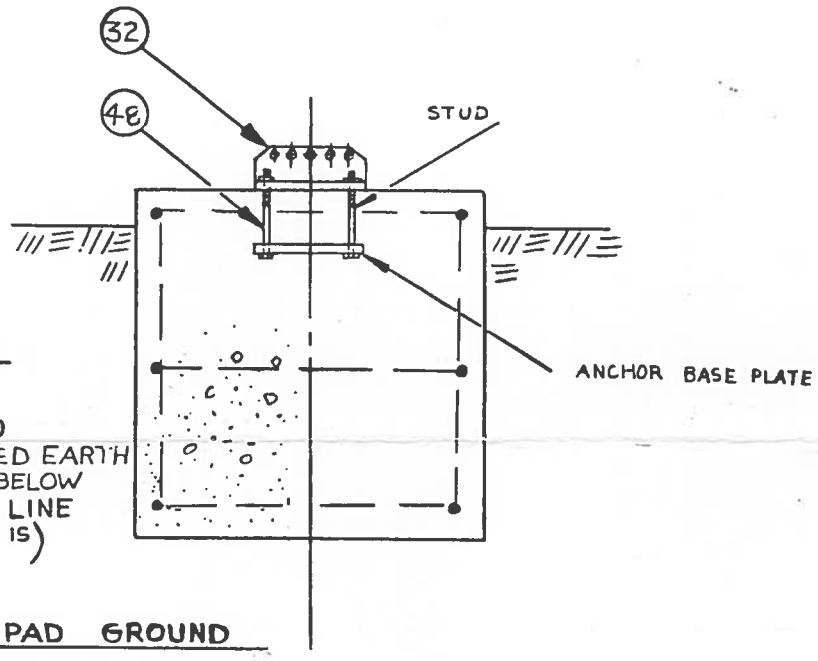

ALTERNATIVE ANCHOR PAD GROUND FIXINGS

DETAIL A-A

4 PLCS

4 PLCS

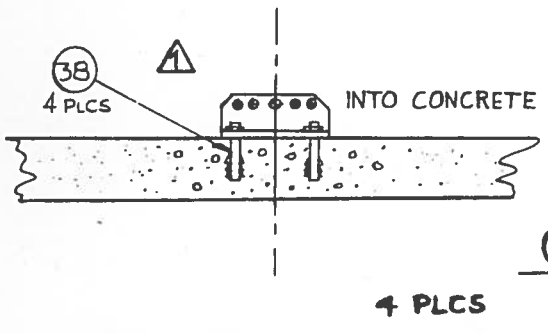

OR

4 PLCS

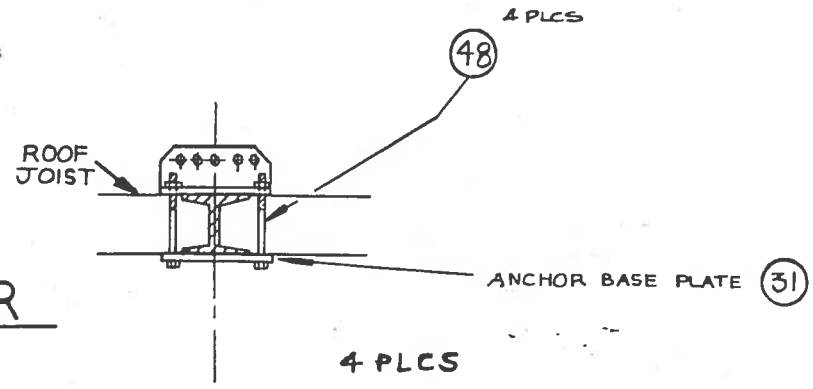

4 PLCS

ALTERNATIVE ROOF ANCHOR PAD FIXINGS

DETAIL A-A

IF USE URE ONLY 25 DIA x 125 MH]

R ALTERNATE ND FIXINGS

QTY. PER NEXT ASSY	NEXT ASSY	QTY. PER TOP ASSY	TOP ASSY
APPLICATION			

UNLESS OTHERWISE SPECIFIED DIMENSIONS ARE IN INCHES
TOLERANCES ON
DECIMALS .000 .00 ANGLES

PROCESS OR FINISH

QUANTITY REQUIRED

DRAWN	MRMM	DATE	29/3/83
CHECKED	MR	DATE	21/1/83
APPROVED		DATE	
APPROVED		DATE	

DIST. AG

G/A PART NO.	DESCRIPTION	U/M	ITEM NO.
LIST OF MATERIALS			

Granger Associates Ltd

BASE & ANCHOR INSTL FOR 3002

SIZE	DRAWING NO	REV.
A1	1071-6973	

SCALE N.T.S SHEET OF 1

PHOTOGRAPHIC SCALE

MILLIMETRES 8 & 10 DIV./INCH